Few Applications of Ether Activation: Churning up "Ether Field" for Electricity and Chemistry

https://overunity-electricity.blogspot.com/2022/04/hurning-up-ether-field-for-electricity-chemistry.html

Mixing in the Ether field is applied to the field of Electricity

Ether mixing is applied to the electrical science of the Aether (Ether) science period, of which Heaviside is the master genius. Here is the quote: Heaviside remarks that the practitioners of his day “do a good deal of churning up the Ether in their dynamos”. – E. Dollard

Tesla's AC generator does not actually generate electricity, but rather the place where the energy of the Ether is expressed, due to the stirring of the Ether field. This is possible through a technique known as 'mixing in the Ether field'. By doing this, electrical energy can be drawn from the Ether and used to power our devices.

Tesla's AC generator is a powerful device that can create electricity, but it does not actually generate the energy itself. Instead, it relies on the Ether field to provide the power. This is an important distinction, because it means that we can tap into the Ether field and get free energy from it.

This is an important distinction, because it means that we can tap into the Ether field and get free energy from it. In fact, many people are already doing this with their solar panels and wind turbines.

> **Revealed At Last: Ancient Invention Generates Energy-On-Demand**
>
> ✓ Nikola Tesla’s method of magnifying electric power by neutralizing the magnetic counter-forces in an electric generator
>
> **Generates Energy-On-Demand**: Easy Power Plan Will Change Our World Forever
>
> ✓ Combination of induction motor and alternator
> ✓ Combine generators with induction motors - self-powered generators with rotary motion
> ✓ **Various methods of generating high power immobile generators**
> ✓ Or maybe called Overunity for the system. Mother Nature doesn't care about people calling or naming phenomena. Overunity or Free Energy, or Zero Point Energy (ZPE) are just a few different words

Tesla's invention of the alternating current (AC) generator in 1888 was a monumental achievement. But was his method really based on the principles of electromagnetism? Some researchers believe that Tesla's AC generator actually is based on the ether perturbation method, which involves **churning up** in the ether field to create an electrical current. This theory has been gaining support in recent years, thanks to new evidence that has emerged from studies of Tesla's patents and notes. If this is true, it would mean that Tesla's AC generator is actually more akin to a energy converter than a purely electrical device.

Space Activator by Ether Activation is applied in chemistry

Space Activation Machine by Leon SPRINK:

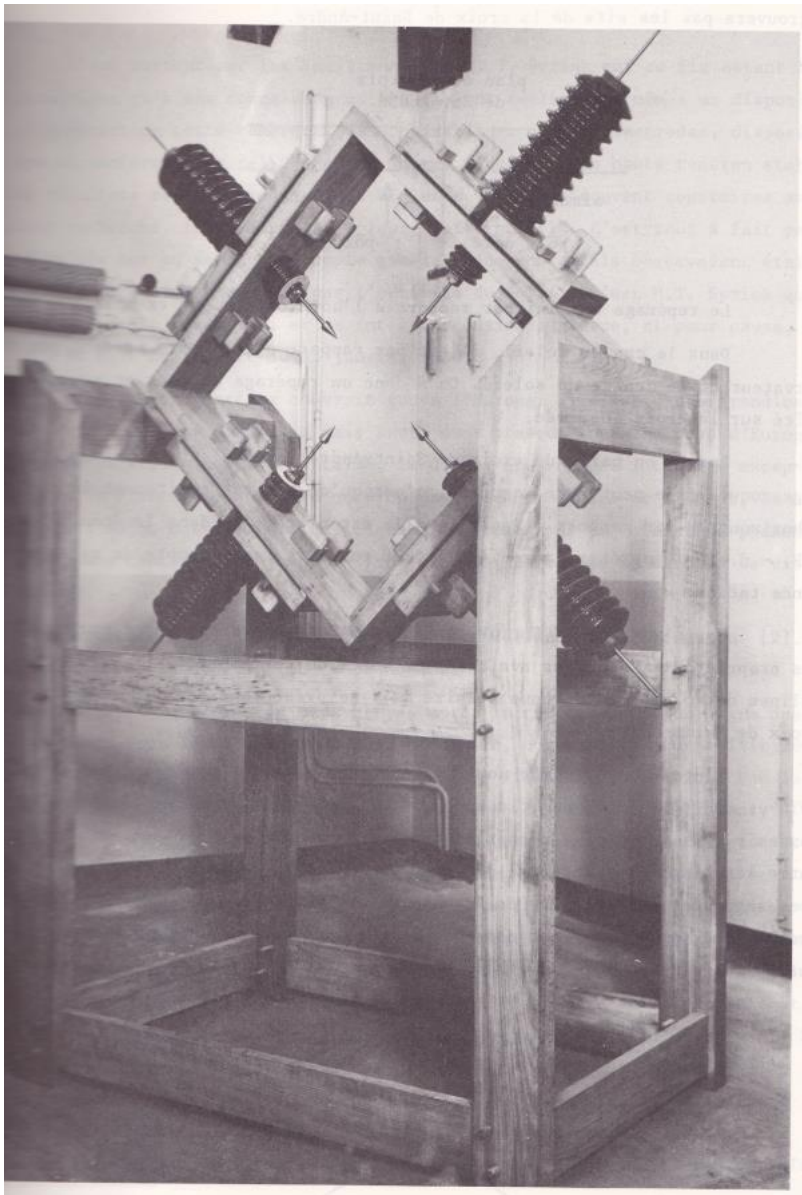

Appareil Sprink monté par lui-même

Decoding for this technology requires Ether theory. Because only Ether can define exactly what space is.

I suspect that this is a Time Generator, per Kozyrev...

80% Reduced Time of Reactions, 50% Reduced Calories

Leon Sprink **was a Russian engineer who operated a cement manufacturing plant in France circa 1950. He received several patents for a simple method to create a type of electric field that accelerates chemical reactions.**

In one example given by Sprink, "One month after the setting in operation of the apparatus, the duration of the reaction, which normally is 24 hours, had fallen down to 3 hours and the saving in calories to be supplied for the reaction was 50%… The field also affects the states of matter such as solubility and crystallization, distillation, reduction of metallic ores, etc..."

In the simplest form of the invention, Sprink used a grounded container placed in an electrostatic field. More control and power was obtained with geometric arrays of positive electrodes mounted diagonally from grounded electrodes.

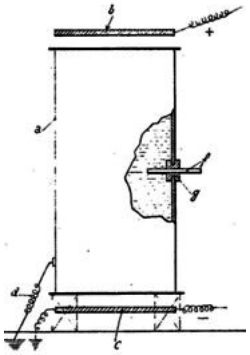

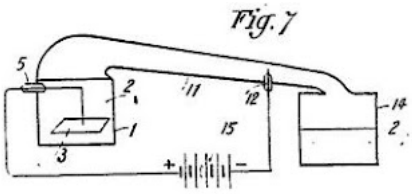

According to Sprink's British Patent # 685,522, "Method of and Apparatus for Carrying out Chemical Reactions --- The set of emissive electrodes of the generator are arranged in one or more planes according to a fixed direction; the latter depends on the position and may depend likewise on the character of the reaction or change of state contemplated, as well as the effect wanted. For the speeding up of reactions such as the manufacture of cement with clinker as a constituent, the manufacture of lime, or saponification, the best direction will be substantially that of the plane at right angles to the direction of magnetic north at the place in question…

"Cement is produced under normal conditions in kilns which are subjected to the influence of crossing fluxes produced in a plane at right angles to the horizontal component of the earth's magnetic field, each of the fluxes being produced by silent electric discharges between two opposing pointed electrodes having a potential difference of 1,000-160,000 volts derived from a source of direct current, the cement kilns being outside the paths of the fluxes. The apparatus for producing the fluxes is operated continuously for twenty days before cement making is commenced, the reaction time then being reduced from 2 1/2 hours to one hour..."

The form (e.g., a cube) was mounted upright and aligned East-West. 1000 to 5000 KV of positive charge (per meter of electrode separation) was applied for two weeks or longer to establish a zone of activation, spreading up to 60 meters:

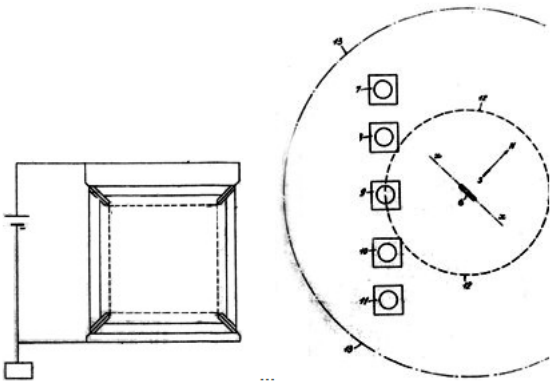

According to Leon Sprink, "The zone in which chemical reactions are carried out, under conditions of temperature and pressure normal to the reactions, is subjected to the influence of crossing fluxes produced in a place at right angles to the horizontal component of the earth's magnetic field, each of the fluxes being produced by a silent electric discharge across two opposing pointed electrodes having a potential difference of 1,000 to 160,000 volts derived from a source of direct current, the reactants being outside the paths of the fluxes. Examples relate to the saponification of tri-stearic with super-heated steam, the production of cement and the reduction of iron and aluminium ores, the reactions in each case being carried out in reactors which, according to their position, are 3 to 60 metres from the apparatus producing the fluxes, such apparatus having been in operation for 20 days before the reactions are commenced.

Large units also allegedly demonstrated "anti-gravitational" effects, and ultraviolet light became visible in the diagonals between the electrodes. Sprink called them "St. Andreas crosses". By varying the position or form of the apparatus, various effects were obtained, "such as speeding up, stabilization, or alteration, in the change of state of matter". The electrodes are "arranged in couples and

distributed along the diagonal lines of geometric figures such as square, rectangles, rhombi, cubes, prisms, etc." Rectified AC may be used.

Sprink's associate Jacques Ravatin received French Patent # 2,421,531 for his similar "Apparatus for Amplifying Emissions Due to Shapes... The apparatus comprises a polygonal frame with sixteen sides, with four electrodes to generate a very high electric field inside the frame . After half an hour, effects on certain physical parameters occur within a radius of several tens of meters : action on the earth magnetic field, the gravitation, the air refraction index, the speed of plant growth, etc..."

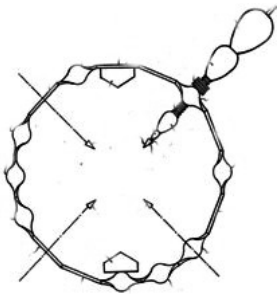

Areas may be insulated from the effect of activation by shielding with rubber or resin. Metals, wood, and structural material (viz., bricks, stone, cement) are pervious to the phenomenon of space activation. The Russian astrophysicist Nikolai Kozyrev reported similar properties in his epochal *Experimental Study of the Properties of Time*. Accordingly, it quite possible that the *Space Activator* also is a *Time Generator* !

The *implications* for energy economy are... "revolutionary" : 80% Reduced Time of Reactions, 50% Reduced Calories ...
The *implementations* for energy economy are... delayed...

Excerpt: Preface (by Raymond Abellio) in Armand Babault: *Gold of a Thousand Mornings*

...To speak of activation of space gets one decidedly nowhere. It is simply a picturesque and handy term, yet one which is heard more and more often. I first encountered it in the description of the patent taken out in 1950 by the Russian engineer Sprink, who runs a cement-manufacturing company in France. In it, he states that the creation of an electric field nearby greatly speeds up reactions inside his ovens. He is unable to explain why...

KeelyNet Archives

Jean-Pierre Lentin (lentin@imaginet.fr)
(21 Jul 1998)

Hi all, and wow ! After all those years, I finally met Mr Jacques Ravatin. Just got back from the meeting, and oh-boy-am-I-thrilled ! Now, the name is probably unknown outside of France, but wait... I kept hearing about Ravatin, his group Ark'Hall (now named Eurek'All), his books (some of them under the pseudonym of Vladimir Rosgnilk), his theories and experiments... He is a 63 years old mathematician and physician, one foot in conventional university, the other in weird science BIG TIME - shape power, sacred geometry, lost technology, incredible devices that warp space-time... He dug out an impressive quantity of obscure patents and forgotten inventors, some of them you all know (like Keely, Lakhovsky, Schauberger), some others you probably don't (like Leon Sprink, Louis Boutard, Max Picard). He experimented with the Leon Sprink device, an orthogonal electromagnetic array that, correctly oriented, produces spectacular and very weird antigravific and bio-chemical effects. Sprink died in poverty in the early 1970's. There are patents for his devices, rumour said the patents mysteriously disappeared, but Ravatin just told me the rumours are crap and the patents are still available. I'll have to check that at I.N.P.I., the French patent office... Stay in tune !

To put it very briefly, it was 4 metal point-like electrodes, disposed on the 4 corners of a square box (of non-conducting material - Balsa wood was often used), polarity opposite across the diagonals (diagonal size 30 centimeters of 1 meter), linked to a DC high tension generator (5000 to 160000 volts, depending on model size and desired effect). Effects were felt all around the devices (at 10 or 60 m distance) : accelerating industrial chemical reaction like cement making ("clinkerisation"), saponification (soap from fats), and metal ores reduction. For the big device with the weirdest anti-gravific effects, the Sprink created a cumulating effect by running the device for days (15 days to 2 months) : concentric zones of influence would slowly unfurl, violet light would be visible along the diagonals ("St-Andreas crosses") and the influence would persist for days after the current was switched off ! Influence is claimed to be dramatic on all sorts of chemical reactions and also reactions of changing states of matter, like fusion, dissolution, cristallisation, pectisation, coagulation... The Sprink reckoned they achieved zones of "activation" (adding that this expression was purely an analogy, as &quotthe scientific nature of the phenomena cannot be precisely and rigorously defined at this time by the inventors").

---

http://pagesperso-orange.fr/intelec/phosphenia/Francais/enel.html

L'émergence de l'Enel ou l'immergence des repères

TOME II --- (Livre relié in-4° de 340 pages dactylographiées)

Léon SPRINK, formes et champs électriques, par J. RAVATIN

Sa jeunesse – La fabrication des savons à haut pouvoir détersif – Les travaux menés avec son épouse – Leur appareil à quatre électrodes – " Le petit soleil " - Liaison avec certaines aurores boréales et des tremblements de terre – Les harpes éoliennes – La structuration des pierres.

Sur les travaux de Léon SPRINK et Marie-Thérèse SPRINK, par Pierre. SMIRNE

Un compte-rendu historique relatif à un ensemble de divers dispositifs destinés à améliorer certaines réactions chimiques, thermiques, métallurgiques et dont le but est une économie énergétique … et financière dans le monde futur.

Introduction

Chapitre I --- Principe des dispositifs Sprink-Ravatin réalisés expérimentalement en maquettes opérationnelles et avantages pratiques.

Chapitre II --- Différents types d'observations et d'expériences ayant amené les demandes de brevets.

Remarque générale – Comment L. SPRINK fut amené à s'intéresser au problème des formes – Expériences fondamentales de SPRINK – Origine de l'industrialisation et amélioration du dispositif de SPRINK de 1923 à 1950 – Tentative d'élaboration d'une théorie devant la complexité des phénomènes – Arrêt des travaux théoriques.

Chapitre III --- Suite des travaux de SPRINK- Nouveaux développements – Abrégé descriptif et principes expérimentaux de l'invention de J. RAVATIN – Effets constatés sur la maquette opérationnelle de J. RAVATIN – Le dispositif de J. RAVATIN en regard de la biologie – Contrôle du bien fondé des résultats obtenus par J. RAVATIN – A voies nouvelles, sémantique appropriée – Envisageons le futur d'une société post-industrielle.

Canadian Patent # 580548
(= DE 868592 = GB 685522)

METHOD AND APPARATUS FOR EXERTING AN INFLUENCE ON REACTIONS AND CHANGES IN THE STATE OF MATTER

1959-08-04

This invention relates to an improved method and apparatus for use in the treatment of matter for the purpose of changing its state, and more particularly is directed to a novel method and apparatus adapted to influence the changes which take place during chemical reactions, combinations and dissociations, and further those treatments in which the chemical composition is not modified, such as fusions, dissolutions, vaporizations, crystallizations, pectizations, coagulations, etc.

It has now been discovered that treatment of the kind mentioned, when carried out in an electrically generated field, or activated space of a type to be more fully explained later, the normally expected results are materially influences in a desired manner, such electrically generated field or activated space being obtained by an apparatus, remote from the apparatus in which the material to be treated is contained, which comprises a minimum of two sets of opposed electrodes of opposite polarity positioned so as to cause the flow of electrical influences of the two sets to meet at a common point as more particularly pointed out hereinafter.

By use of such apparatus and the field thus generated novel and unexpected results have been obtained in the treatment of materials at points substantially removed from the generating apparatus.

We have previously described a method and apparatus capable of exerting an influence on chemical reactions which method consisted in locating the reacting medium into an earthed container which itself was paced into an electrostatic field, an electrical connection between said medium and the outer atmosphere being provided by means of an insulated electrode.

Our works and experiments have enabled us to make it clear that, if some results can be obtained with such previous dispositions, these results are not the same nor are they regular because of the changes in the internal equilibrium of the materials in reaction inside the apparatus, they depend upon various influences outside the apparatuses and cannot be applied to a large number of industrial problems.

On the contrary, with method and apparatuses according to our present invention, it becomes possible to obtain improved and novel results which are regular and of an easier industrial realization.

According to a first object of our invention we exert such an action in locating said medium in the neighborhood but apart from an apparatus, giving out two or more beams of corpuscles more particularly corpuscles carrying charges like electrons by means of at least two sets of opposed electrodes of opposite polarity positioned so that the said beams will meet in a localized zone of space. That localized zone becomes the center of phenomena, hereinafter called 'activation of space phenomena', which cause modification in reactions and changes of state of matter.

Another object of our invention consists in the step of orienting that geometrical figure formed by the apparatus in such a direction with regard to the magnetic north as to obtain the most satisfactory results, which direction will be dependent on the intended operation.

By varying the direction or the conditions of the emission of corpuscles, such as the position, dimensions or forms of the apparatus and of the electrical conditions under which it is to work, it will be possible to modify the character or the direction of the activation and this, bring about various effects such as speeding up, stabilization, or alteration, in the change of state of matter.

According to another feature of the invention, instead of placing the reacting medium under the influence of an electrostatic field, i.e., between the plates of the apparatus creating that electrostatic field, we localize it apart or even remote from the zone where the meeting of the aforesaid corpuscle beams is made to occur, the ranges of distances from this zone which are effective being selected according to the operation to be performed.

According to another feature of the invention, te geometrical figure formed by the emitting apparatus is oriented relative to the magnetic field of the earth in a direction which depends upon the operation to be performed.

Moreover, we have established that if reactions or changes of state of matter are subjected, for instance, to the action of certain corpuscles carrying charges, more particularly by taking steps as will be explained hereinafter, the effect produced when these electrical phenomena are applied is comparatively small and sometimes may be negligible altogether; but tat on the other hand, if their application is sustained continuously over a long period. For instance over 15 days to 2 months, there will be a progressive setting up of concentric areas around the apparatus, in which the space has taken on properties of activation and if the matter or reactive mixture is brought int these areas, under normal conditions of temperature, pressure, etc., the speeds of reaction or changes of state are influences to a very high degree by the mere fact that they take place in the activated space. This influence persists even after interruption of the electric circuit that is the source of activation, so that the area remains activated, and this activation only fades out after an appreciable time after the cessation of the electrical impulse that brought it about.

Consequently, in accordance with the invention, the next step consists in activating the working space of the equipment in which the reactions or changes of state are to occur, well in advance of the beginning of the actual activation; the influence on the change of state of the matter will take place when the required period and degree of activation will be reached, and then, during the whole duration of the treatments contemplated.

It must be remarked that the required strength of activation varies according to the character of the reactions or changes of state in question and that the effect sought for only builds up from the moment when this degree of activation is reached. A decision will be made, according to this required degree, in regard to the characteristics of the equipment productive of the activation phenomenon and more particularly with reference to the voltage at the electrodes of the apparatus and their distances to the point where the reaction or change of state is to take place.

As an example and without this declaration being regarded as imposing any restriction to the invention, it may be pointed out that in the manufacture of cement utilizing the formation of clinker as a constituent step a sufficient degree activation of the space has been obtained, at the end of 5 weeks at a distance of 50 meters from a productive apparatus working under a voltage of 50,000 volts.

It should be observed, in what has gone before, that the words ‘activation of space; must only be taken in the sense of their likeness in function but not in origin, since the scientific character of the established phenomenon cannot be clearly defined, at the present time with a strict degree of exactitude.

The invention comprises, further, means for effecting this activation of the space which means will be hereinafter described in detail with reference to the annexed illustrative drawings which show diagrammatically only some examples of realization of our invention and which cannot be considered as a limitation.

Fig. 1 is a diagram of an embodiment of the apparatus.

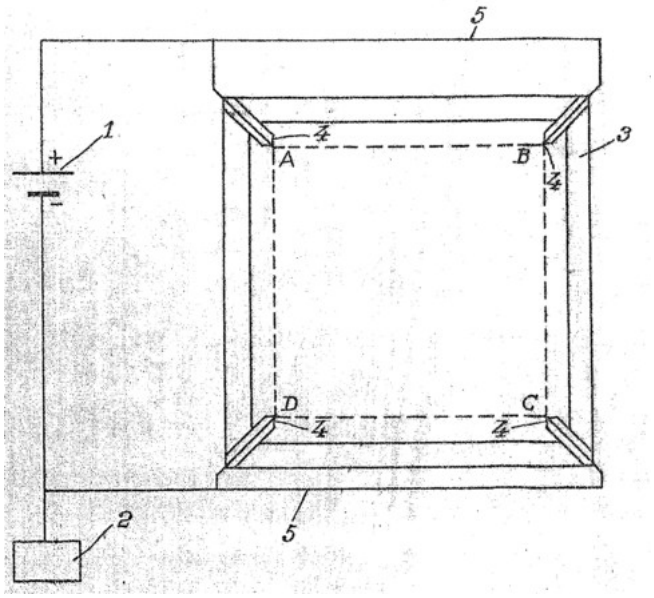

Fig. 2 is a diagrammatic plane view showing the respective arrangement of the said apparatus with regard to a set of kilns for lime production.

Fig. 2

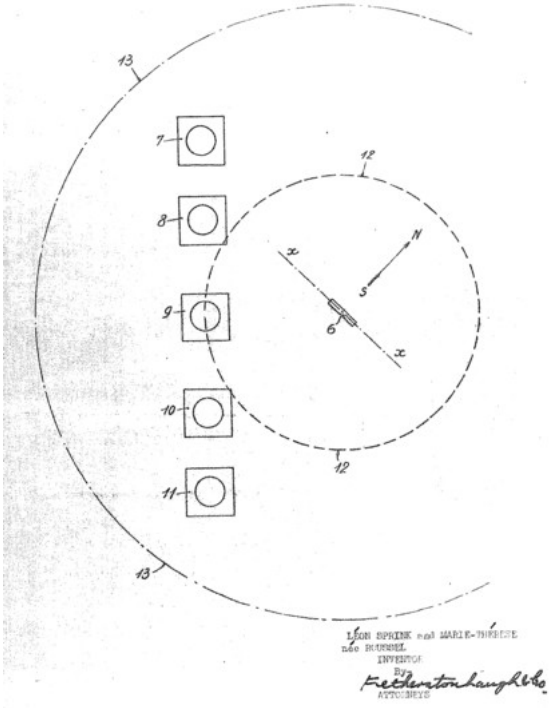

Referring to these drawings, it will be made clearer that our invention can be performed through the medium of the following new and improved means:

(a) First of all the intended activation will be obtained by means of emissive apparatuses suitably headed such as electrodes arranged in couples and distributed along the diagonal lines of geometric figures such as square, rectangles, rhombi, cubes, prisms, etc.

Use may be made more particularly for the formation of these emissive apparatuses , of a frame carrying a certain number of fine metal points arranged in sets of four at the vertices of a square and connected respectively in sets of two to opposite poles of a voltage supply.

Thus, for example, as on the embodiment shown in Fig. 1, 1 is a DC generator at high voltage of which the negative pole is earthed at 2, the frame of non-conducting material acting as carrier for four conducting points 4 arranged at the vertices of a square A,B,C,D, these points 4 being connected in pairs by conductors 5 to the two poles of the generator I, so that the points located respectively at the two ends of a diagonal line AC or BD are connected one to the positive pole and the other to the negative pole.

(b) The productive apparatuses may be perfected by linking up the emissive electrodes (or equivalent) to one supply of DC voltage, preferably positive, the other being earthed.

It will be possible, more particularly, to establish a positive direct voltage, although undulatory by connecting up emissive electrode through the medium of a rectifier on an alternating current main.

(c) The emissive electrodes of one of the poles are connected to a suitable voltage supply (positive for instance) and the electrodes of opposite polarity to a natural or artificial body of water, in order to establish an electrical ground connection that is as near to perfection as is possible.

(d) The set of emissive electrodes of the generator are arranged in one or more planes according to a fixed direction; the latter depends on the position and may depend likewise on the character of the reaction or change of state contemplated, as well as the effect wanted. **For the speeding up of reactions** such as the manufacture of cement with clinker as a constituent, the manufacture of lime, or saponification, **the best direction will be substantially that of the plane at right angles to the direction of magnetic north** at the place in question.

In accordance with our invention, the electrodes may be arranged on a swiveling frame; change of direction will permit, in fact, the character of the activation of the space to be varied and consequently to alter the influence exercised on the changes of state or reactions.

(e) Certain points on apparatus may be shielded from the effect of activation mentioned above, although they are in the activated area, by means of screens or jackets of insulating material; this insulating material will be preferably rubber or resinous material. The inventors have established, in fact, that the metals, wood, structural material (bricks, stone, cement) are pervious to the phenomenon of space activation, while rubber apparently presents an impassable barrier.

It may be possible, more particularly, in accordance with the invention, to set up apparatus in restricted areas by furnishing such apparatus with impervious walls or partitions of suitable shape made of rubber or resinous materials.

For the practical use of our method, one will take the following steps:

The apparatus, such as that shown in Fig. 1, or its equivalent is set up at a point 6 (Fig. 2), located apart from the kilns or other apparatus 7,8,9,10,11, in which the reactions to be influenced are performed. That distance may practically vary from about three meters for the most proximate kilns to sixty meters and even more according to the power of the apparatus 6; the latter is oriented so that the plane x-x formed by the electrodes is substantially perpendicular to the Magnetic North direction.

When the voltage has been set up for a protracted time, the influence of the inventive apparatus becomes noticeable on the nearer kilns, for example on those which are inside a perimeter represented in dotted lines at 12 (Fig. 2); then the effect extends progressively to the farther kilns, in zones concentric to the apparatus 6, to a limit which depends among other things on the character of the reactions and the power of the apparatus.

The invention, of course, is in no way restricted to the method of realization as illustrated and described which is only given as an example.

For example, instead of making use of four electrodes, use might be made of eight points arranged at the vertices of a cube.

Such a device may be employed for the speeding up of various reactions as shown in the following examples:

Example I

Use has been made of four points 4 of which the distance diagonally (AC or BD) between the points was 0.50 meter. The voltage supplied by the generator 1 was 5000 volts. The apparatus placed inside a house was arranged in the proximity of a set of autoclaves employed for the saponification of fatty substances. The distance from the apparatus to each of the autoclaves was 3 to 10 meters according to the position of the latter. One month after the setting in operation of the apparatus, the duration of the reaction, which normally is 24 hours, had fallen down to 3 hours and the saving in calories to be supplied for the reaction was 50%.

Example II

Use has been made of four points of which the distance diagonally between points was 1 meter; the voltage supplied was 60,000 volts. The apparatus was arranged in the proximity of a set of four vertical kilns employed for the manufacture of hydraulic lime; these kilns were loaded during 8 hours by day; the distance from the apparatus to each of the kilns was about 3 to 60 meters according to the position of the carious kilns. Two months after the setting in operation of the apparatus, for a charge of 626, 634 kg of lime ore and 79, 945 kg of coal (calorific value 4460 calories) we have extracted from the kilns 447, 091 kg of lime which corresponds to a rate of 790 calories per kilogram of unslaked lime obtained instead of the usual rate of 1200 calories for the same quantity of lime.

Example III

Similar results have been obtained in laboratory experiments during tests relating to the reduction of ores, such as ores of iron, aluminum… by making one of the four points of which the distance from the apparatus to the laboratory kilns varies from 3 to 50 meters and the voltage applies being 160,000 volts.

Patents

GB685522
Method of and Apparatus for Carrying out Chemical Reactions

Abstract --- The zone in which chemical reactions are carried out, under conditions of temperature and pressure normal to the reactions, is subjected to the influence of crossing fluxes produced in a place at right angles to the horizontal component of the earth's magnetic field, each of the fluxes being produced by a silent electric discharge across two opposing pointed electrodes having a potential diffierence of 1,000 to 160,000 volts derived from a source of direct current, the reactants being outside the paths of the fluxes. Examples relate to the saponification of tri-stearic with super-heated steam, the production of cement and the reduction of iron and aluminium ores, the reactions in each case being carried out in reactors which, according to their position, are 3 to 60 metres from the apparatus producing the fluxes, such apparatus having been in operation for 20 days before the reactions are commenced. ALSO: Cement is produced under normal conditions in kilns which are subjected to the influence of crossing fluxes produced in a plane at right angles to the horizontal component of the earth's magnetic field, each of the fluxes being produced by silent electric discharges between two opposing pointed electrodes having a potential difference of 1,000-160,000 volts derived from a source of direct current, the cement kilns being outside the paths of the fluxes. The apparatus for producing the fluxes is operated continuously for twenty days before cement making is commenced, the reaction time then being reduced from 2 1/2 hours to one hour.

FR866491
(1941-08-14)
Dispositif pour améliorer les réactions chimiques

Fig. 1

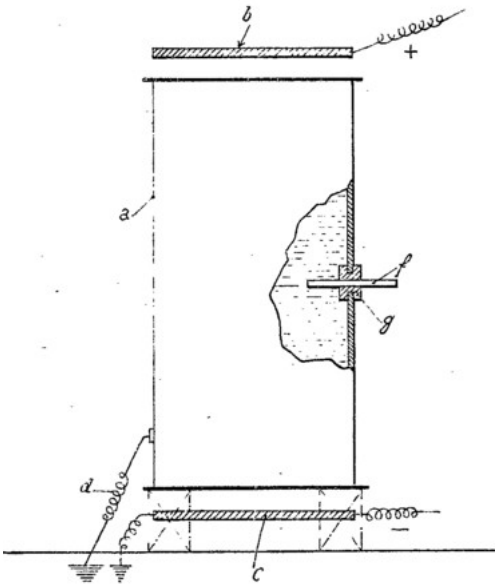

FR762697
(1934-04-16)
Procédé et dispositifs pour la transformation d'un liquide en vapeur et réciproquement

Fig. 1

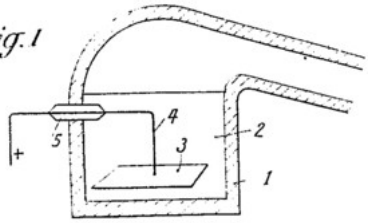

Fig. 2

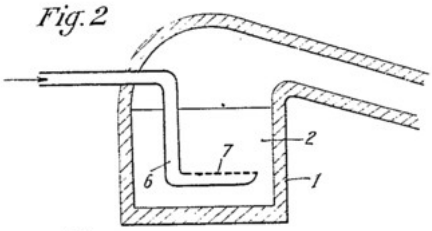

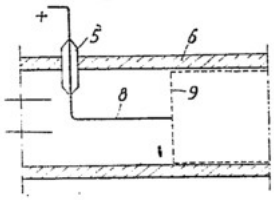

Fig. 3

Fig. 4

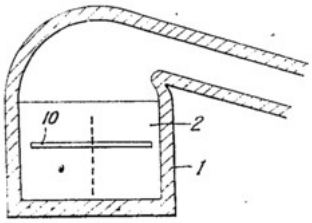

Fig. 5

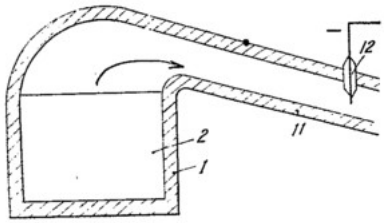

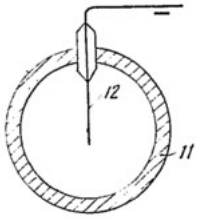

Fig. 6

Fig. 7

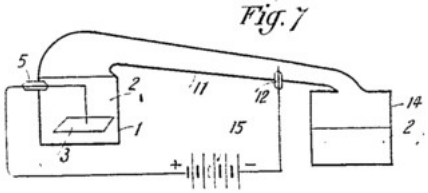

FR966735
(1950-10-17)
Procédé et appareils destinés à exercer une influence sur les modifications d'état de la matière

FR1005532
(1952-04-11)
Dispositif pour l'amélioration de certaines réactions chimiques

FI25576
(1952-02-11)
Vorrichtung zur Durchfuehrung von Reaktionen und Zustandsaenderungen der Materie
Anordning varmed man inverkar på reaktioner eller ändringar i ett ämnes tillstånd

GR11802
(1948-09-28)
No title available

See also:--

WO8000293 // FR2421531

Apparatus for Amplifying Emissions Due to Shapes

Jacques RAVATIN

1979-10-26
Classification: - international: A01G7/04; A61N1/16; H05F7/00; A01G7/04; A61N1/00; H05F7/00; (IPC1-7): H05C3/00; - European: A61N1/16
Also published as: WO8000293 (A1) // EP0016079 (A1) // EP0016079 (A0)

Abstract --- The apparatus comprises a polygonal frame with sixteen sides (1 to 16), this frame being associated with four electrodes (19 to 22) allowing to generate inside the frame a very high electric field. After a starting time of about half an hour, effects on certain physical parameters considered to be invaluable for a given location occur within a radius of several tens of meters around the apparatus: action on the earth magnetic field, the gravitation, the air refraction index, the speed of plant growth, etc..

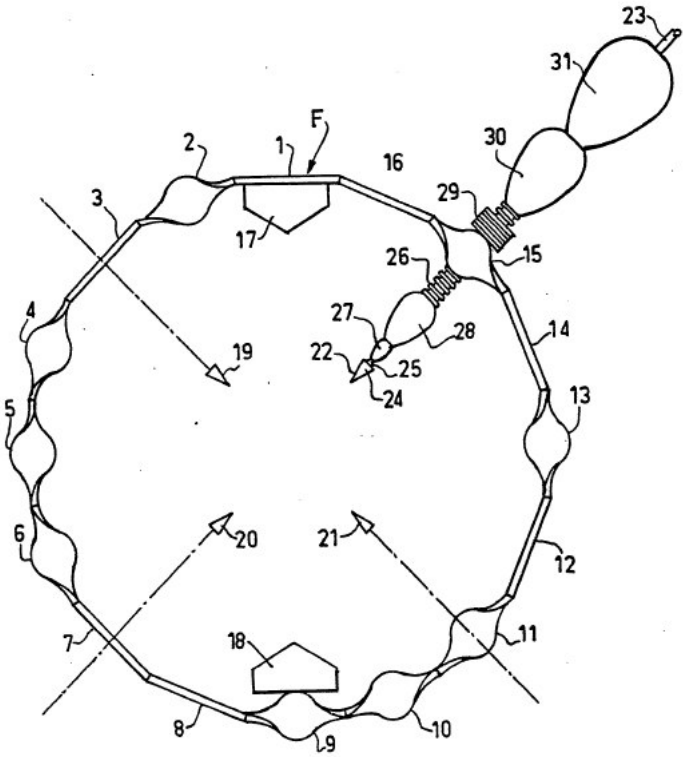

FIG.1

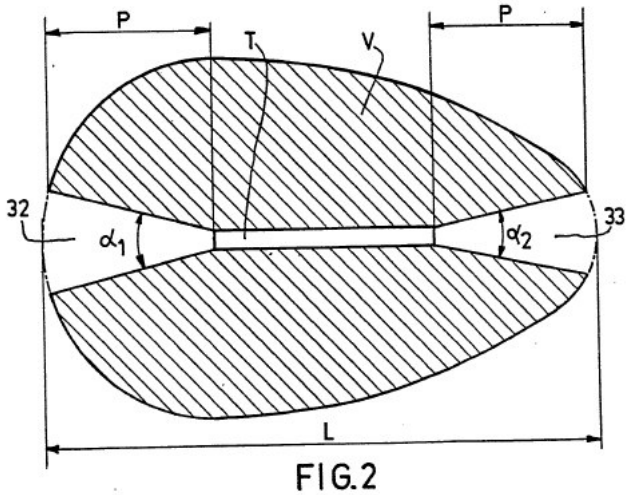

FIG.2

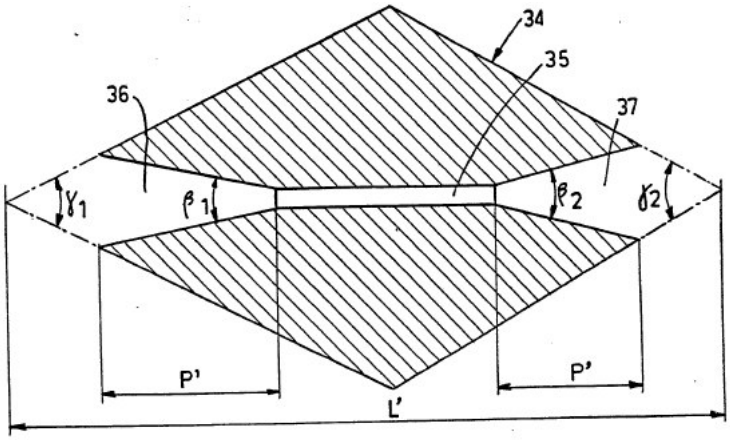

FIG.3

BUREAU
OMPI

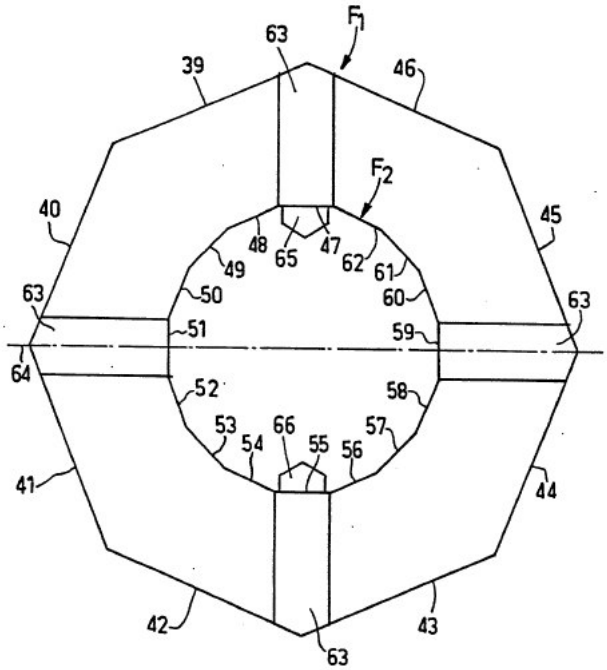
F1
F2
39
40
41
42
43
44
45
46
47
48
49
50
51
52
53
54
55
56
57
58
59
60
61
62
63
64
65
66

FIG. 4

Star Mother
Sacred Geometry
Modeling Kit
286 'Zome' Pieces
Symmetry for
Implosion /
Fusion /
al KHEM y
Star-Tetra (Green)
Octa (Red)
Cube (Blue)
Dodeca (White)
Icosa (Yellow)
Dodeca (White)
infinite
non-destructive
wave collapse..
a 3D Fractal..
Grail In DNA..
Poincare/Einstein
Symmetry
for
Gravity..
Palladium
(Fusion)
Atomic
Shape
Full Instructions
with
VIDEO CD
Included
www.goldenmean.info
www.soulinvitation.com/kit
Implicate Infinite
3D Interdigitation / Fractality

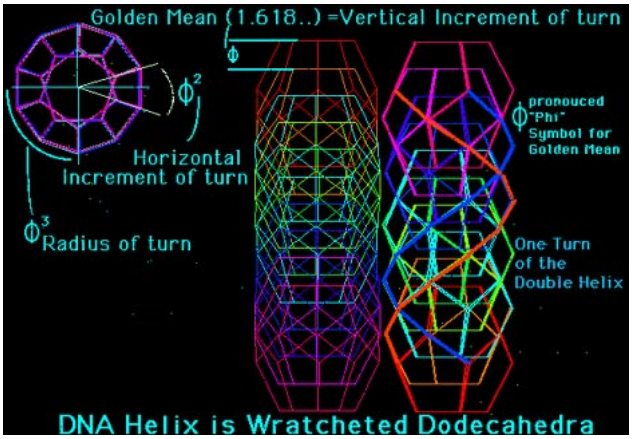

CONTACT OVERUNITY ELECTRICITY:

- Email: overunity.electricity.blogspot@gmail.com
- **News & FAQs about Energy**
- **Generates Energy-On-Demand**: Easy Power Plan Will Change Our World Forever
- Download the guide to learn how to build your own DIY power generator: Easy DIY Power Plan

Revealed At Last: Ancient Invention Generates Energy-On-Demand

✓ Nikola Tesla's method of magnifying electric power by neutralizing the magnetic counter-forces in an electric generator

Generates Energy-On-Demand: Easy Power Plan Will Change Our World Forever

✓ Combination of induction motor and alternator
✓ Combine generators with induction motors - self-powered generators with rotary motion
✓ **Various methods of generating high power immobile generators**
✓ Or maybe called Overunity for the system. Mother Nature doesn't care about people calling or naming phenomena. Overunity or Free Energy, or Zero Point Energy (ZPE) are just a few different words

POST A COMMENT